Combi (230v) + Single Zone UFH

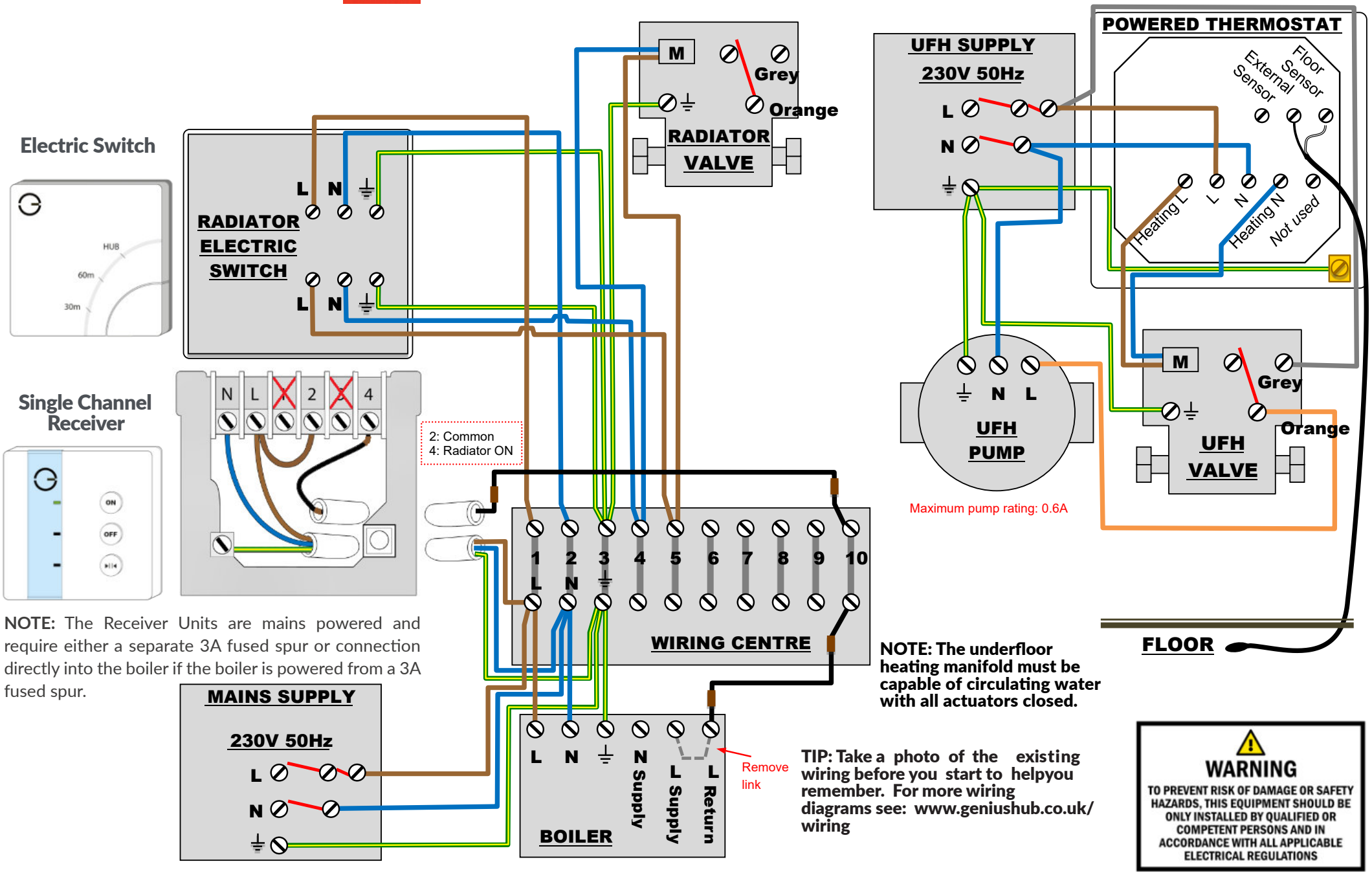

NOTE: The Receiver Units are mains powered and require either a separate 3A fused spur or connection directly into the boiler if the boiler is powered from a 3A fused spur.

NOTE: The underfloor heating manifold must be capable of circulating water with all actuators closed.

TIP: Take a photo of the existing wiring before you start to helpyou remember. For more wiring diagrams see: www.geniushub.co.uk/wiring

WARNING

TO PREVENT RISK OF DAMAGE OR SAFETY HAZARDS, THIS EQUIPMENT SHOULD BE ONLY INSTALLED BY QUALIFIED OR COMPETENT PERSONS AND IN ACCORDANCE WITH ALL APPLICABLE ELECTRICAL REGULATIONS